ＳＫＹ９０ Extender-Q 1.6X System Chart

13. 50.8 sleeve [TKP00113]
32. T-mount
34. 35mm SLR/DSLR camera
36. TCA-4[TKA00210]
46. Ocular adapter (31.7mm)[TKP00101]
47. Ocular(31.7mm)
48. Ocular(50.8mm)
49. Diagonal prism(31.7mm)[TKA00541]
60. Extender-Q 1.6x [TKA00595]
61-A. Extension ring (L) [TKA00586]
61-B. Extension ring (S) [TKA00587]
62. Visual adapter(EXQ)[TKA00588]

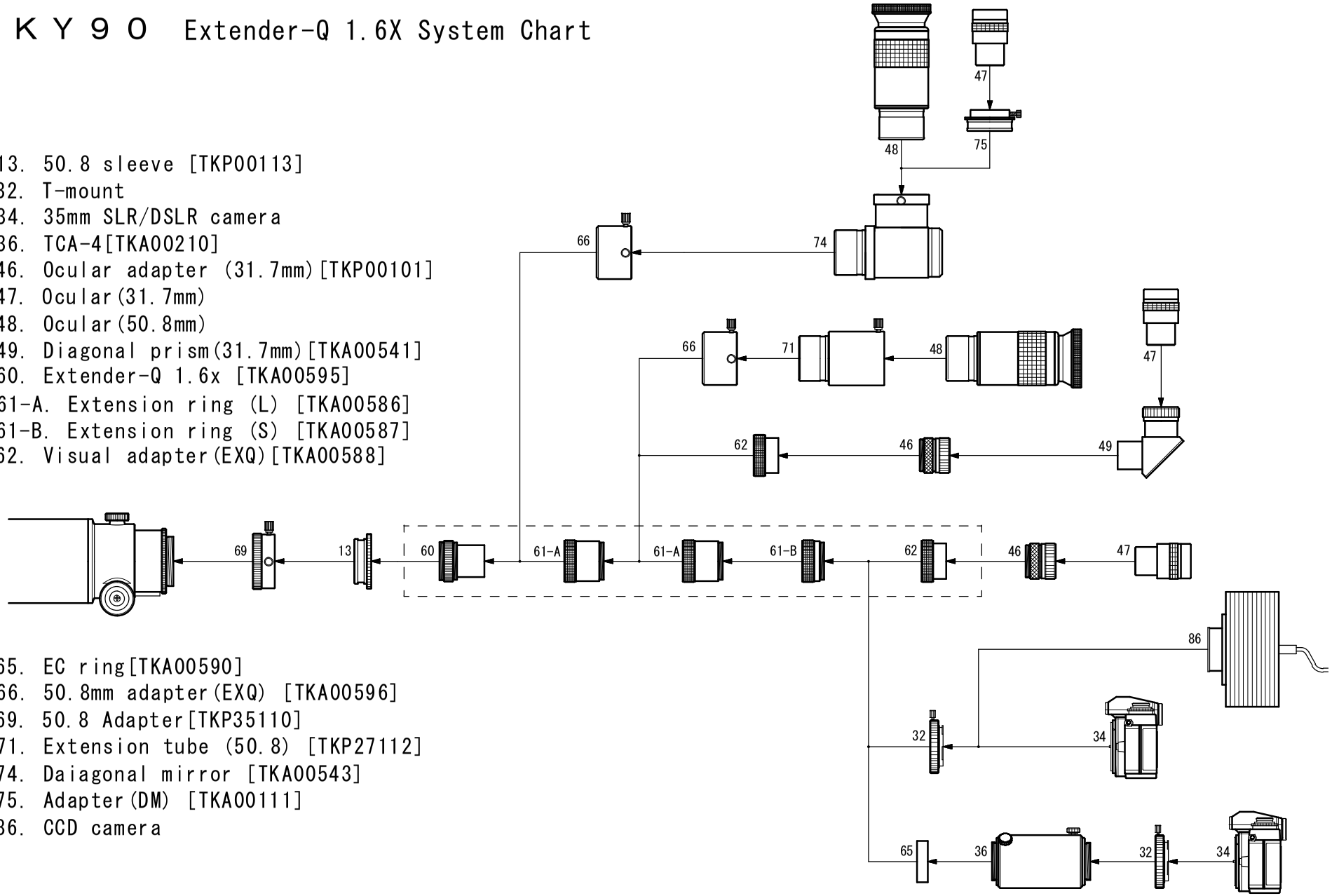

65. EC ring[TKA00590]
66. 50.8mm adapter(EXQ) [TKA00596]
69. 50.8 Adapter[TKP35110]
71. Extension tube (50.8) [TKP27112]
74. Daiagonal mirror [TKA00543]
75. Adapter(DM) [TKA00111]
86. CCD camera